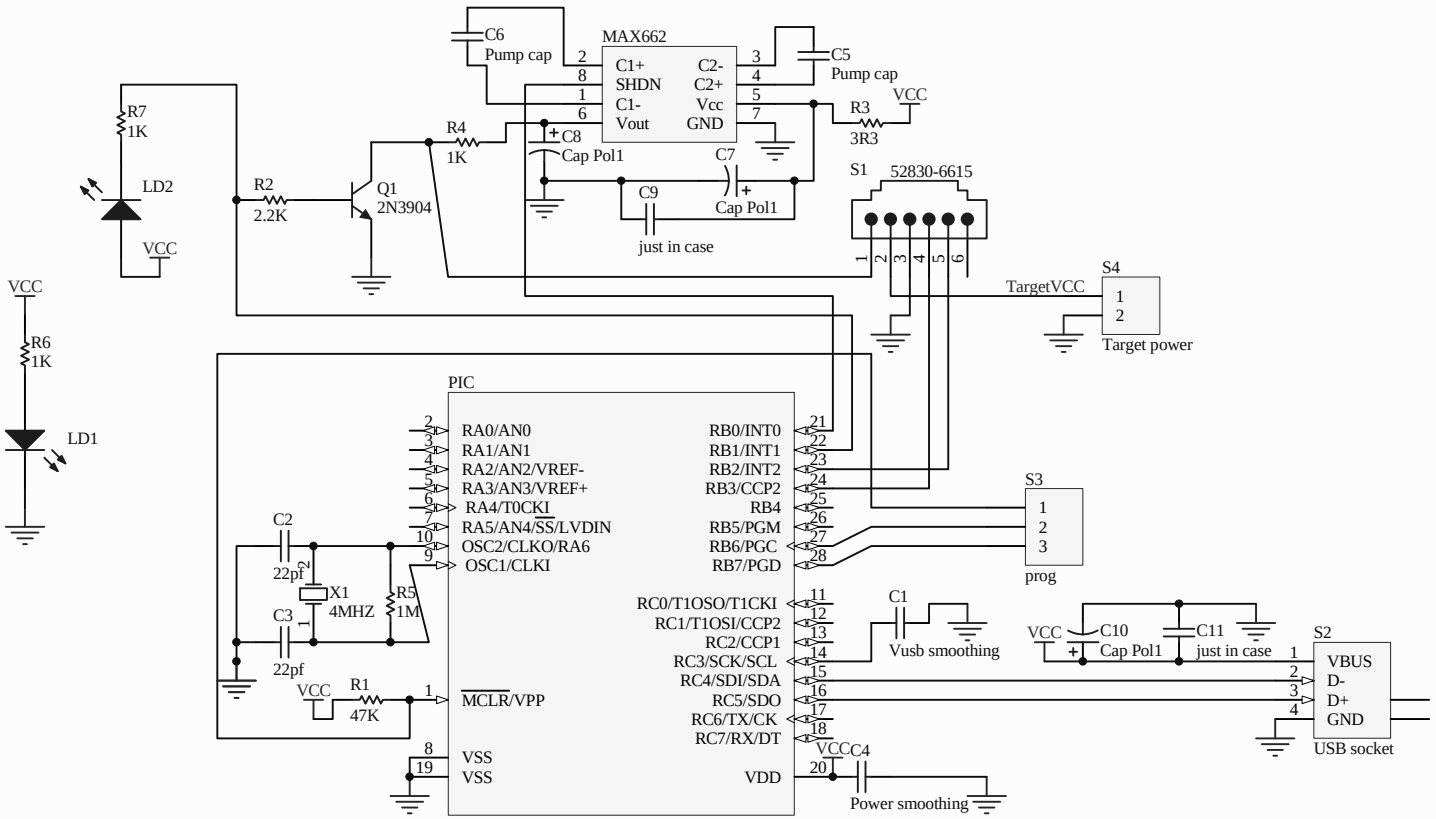

Title		
Size A4	Number	Revision
Date: 09/08/2006	Sheet of	
File: P:\usbpicprogrammerpcb\..programmer.SchDoc	Drawn By:	